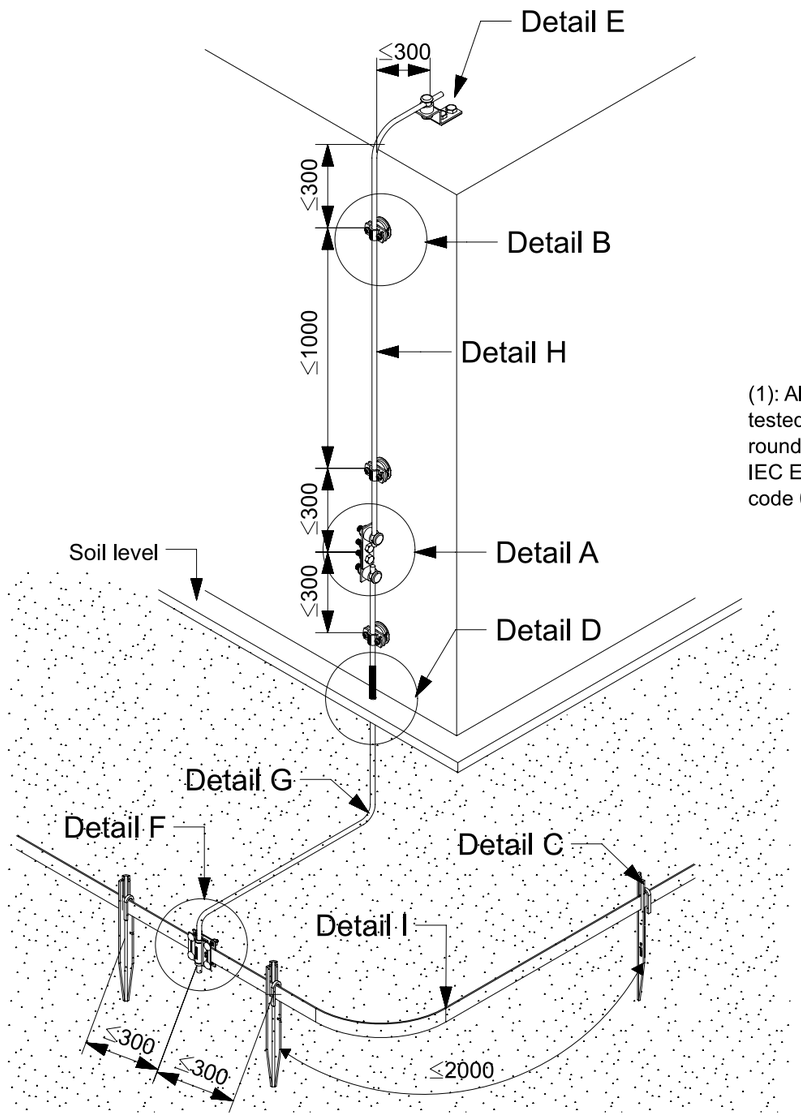

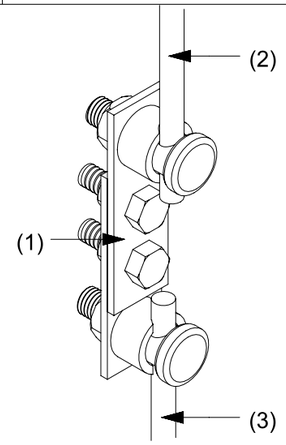

Detail A

(1): Aluminium ∅8-10 test clamp ELEMKO code 62 45 000 tested according IEC EN 62561 - 1 with (2) Aluminium round conductor ELEMKO code 64 40 008 tested according IEC EN 62561 - 2 and (3) St/tZn ∅10 round conductor ELEMKO code 64 00 011 tested according IEC EN 62561 - 2

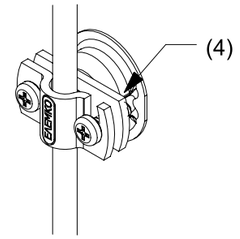

Detail B

OR

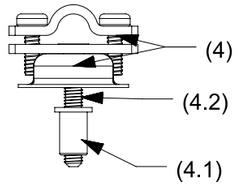

(4): St/tZn fastener ELEMKO code 61 01 100, for round conductor 8-10mm. 1 fastener per 1m of solid round conductor , tested according IEC EN 62561 - 4 (**for use in concrete or brick walls**)

(4): St/tZn fastener ELEMKO code 61 01 100, for round conductor 8-10mm. 1 fastener per 1m of solid round conductor , tested according IEC EN 62561 - 4 with (4.1) blind rivet nut M6 ELEMKO code 65 04 403 and (4.2) M6x40 screw ELEMKO code 57 00 640 (**For use in metallic surfaces**)

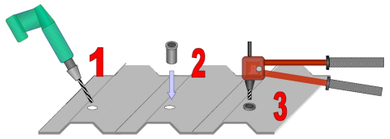

1) Drilling the metal panel

2) Install the blind rivet nut

3) Decompression blind rivet nut with hand riveter (ELEMKO code:65 04 000)

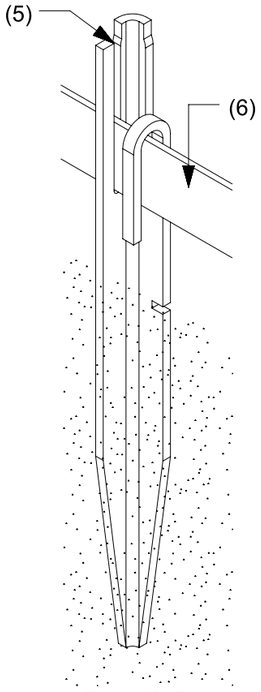

Detail C

(5):St/tZn tape - conductor fastener with safety clip ELEMKO code 61 03 025 and (6) St/tZn 30x3,5 tape conductor ELEMKO code 64 01 133 tested according IEC EN 62561 - 2

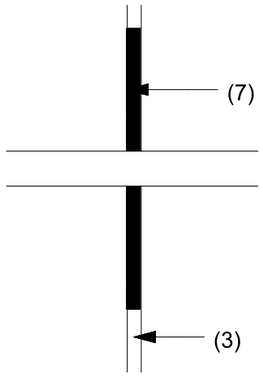

Detail D

(7): Anticorrosion tape ELEMKO code 61 03 303 and (3) St/tZn ∅10 round conductor ELEMKO code 64 00 011 tested according IEC EN 62561 - 2

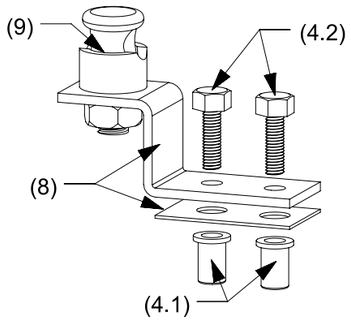

Detail E

(Bonding to metallic surface of the roof)

(8):St/tZn end clamp ELEMKO code 65 04 402 tested according IEC EN 62561 - 1 with (9) Al - St/tZn single bonding clamp ELEMKO code 62 45 141 tested according IEC EN 62561 - 1 ,(4.1) Aluminium blind rivet nut ELEMKO code 65 04 403 and (4.2) hexagon bolts ELEMKO code 57 21 620

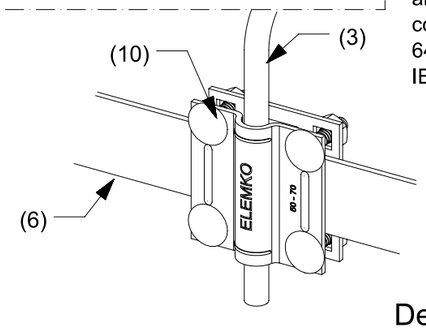

Detail F

(10): St/tZn clamp with stainless steel screws ELEMKO code 62 01 830 tested according IEC EN 62561 - 1 with (6) St/tZn 30x3,5 tape conductor ELEMKO code 64 01 133 tested according IEC EN 62561 - 2 and (3) St/tZn ∅10 round conductor ELEMKO code 64 00 011 tested according IEC EN 62561 - 2

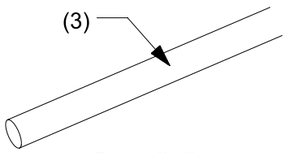

Detail G

(3) St/tZn ∅10 round conductor ELEMKO code 64 00 011 tested according IEC EN 62561 - 2

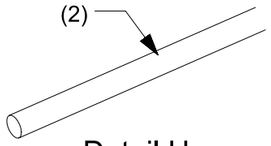

Detail H

(2): Aluminium ∅8 round conductor ELEMKO code 64 40 008 tested according IEC EN 62561 - 2

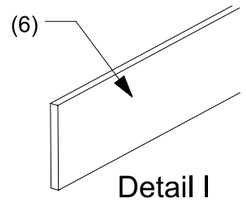

Detail I

(6): St/tZn 30x3,5 tape conductor ELEMKO code 64 01 133 tested according IEC EN 62561 - 2

All dimensions in mm

ELEMKO		TITLE : Construction of down conductor and earthing system at structures 4-10
FIRST ISSUED	January 2020	
DRAWN BY	Dionysopoulos G.	DRG NO.
CHECKED BY	Kokkinos D.	093
APPROVED BY	Kokkinos D.	www.elemko.gr elemko@elemko.gr
SCALE	None	
ISSUANCE DATE	January 2020	SHEET 1 OF 1

A3