1

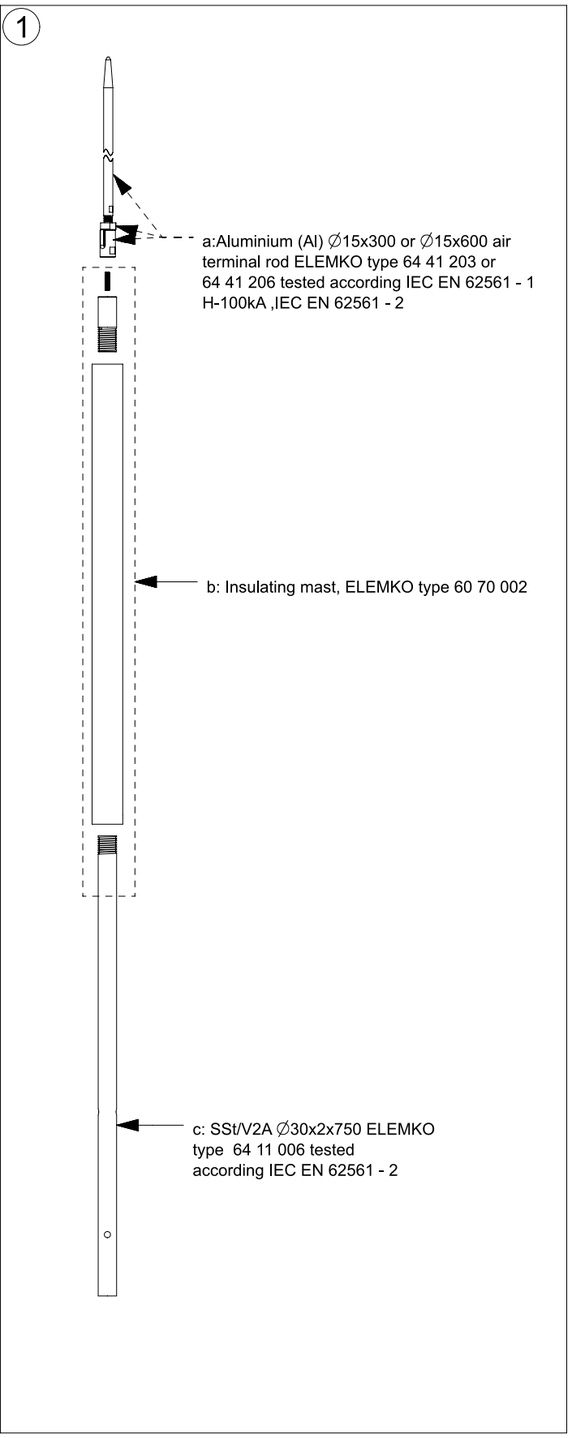

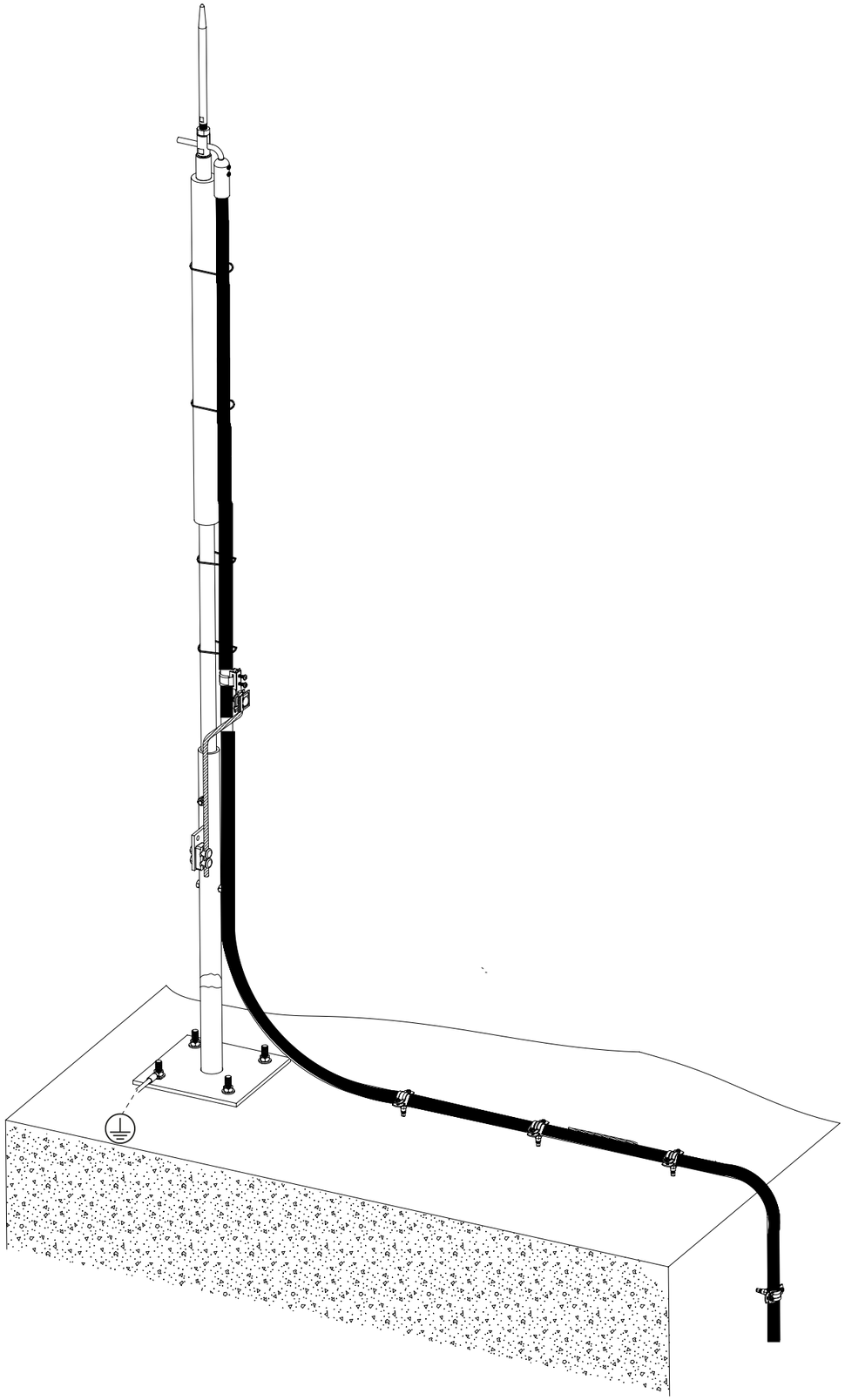

2

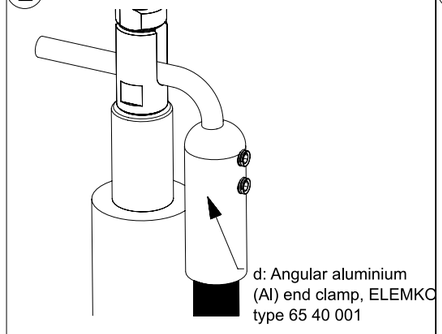

3

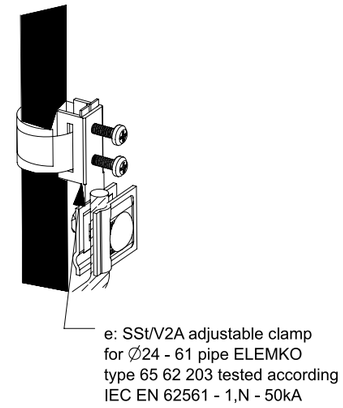

4

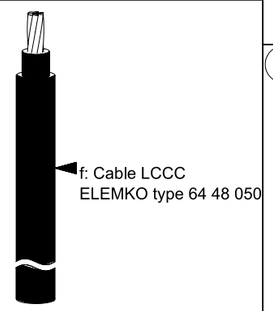

5

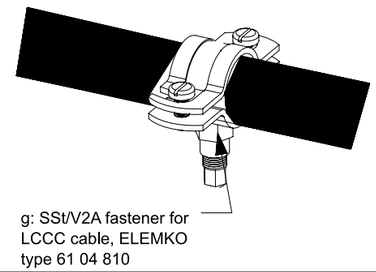

6

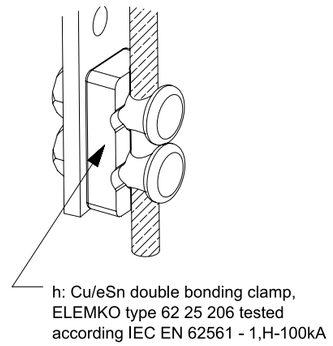

7

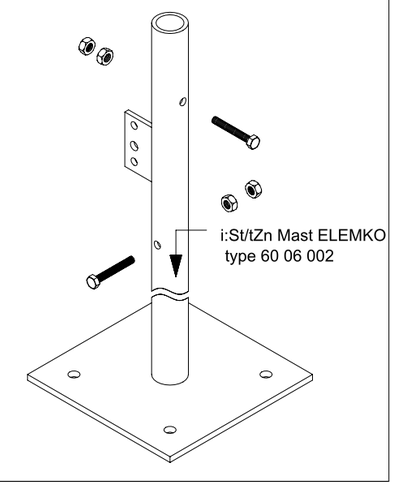

8

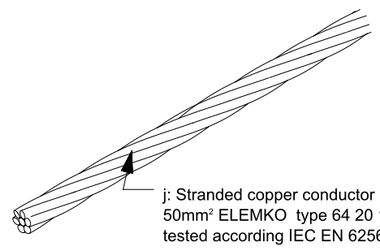

All dimensions in mm