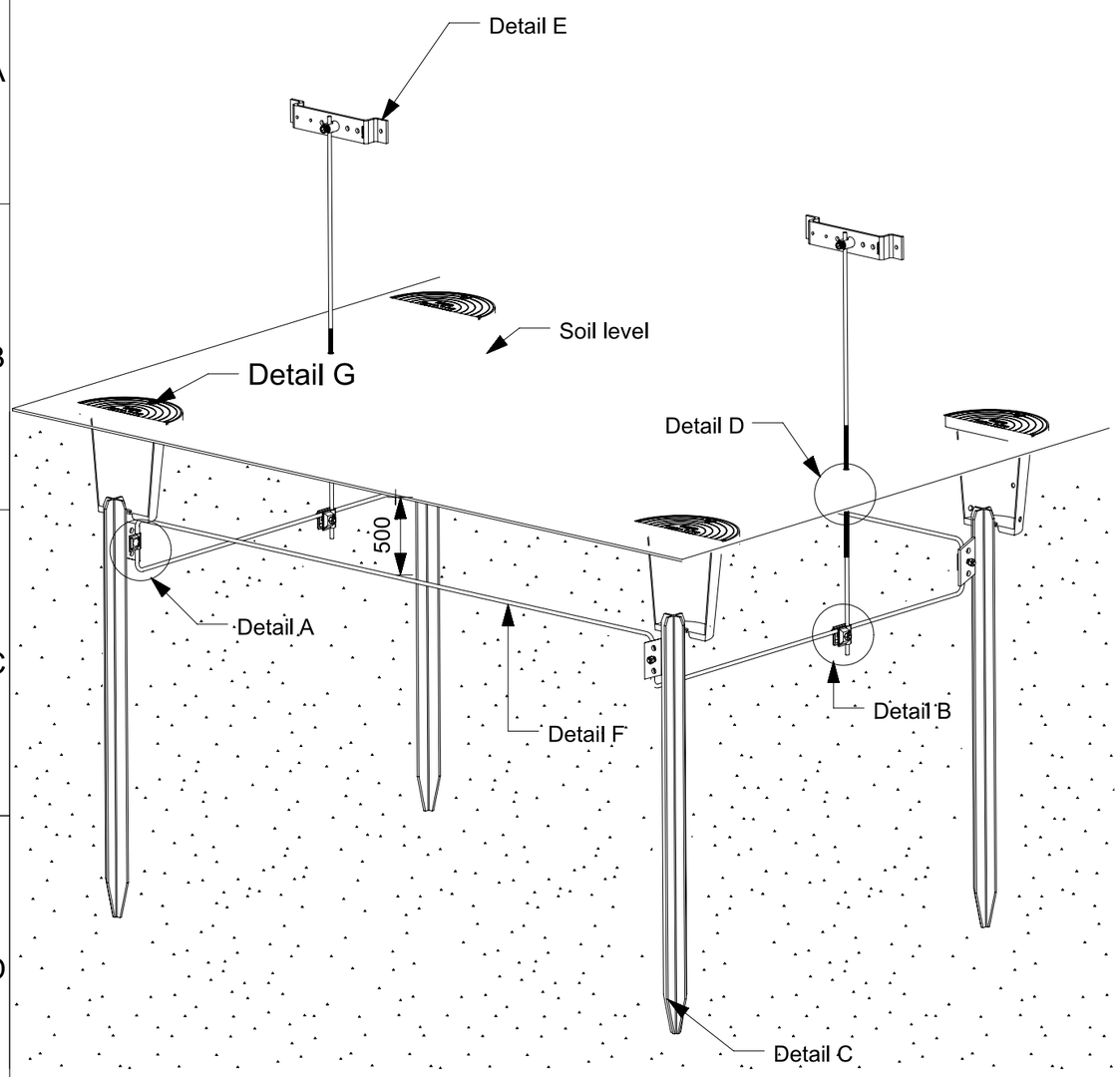

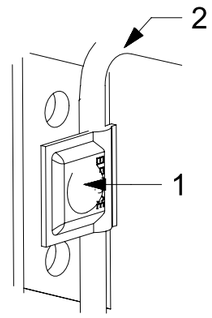

Detail A
Clamping plate "H" for bonding to metallic surface (1) and round conductor (2)

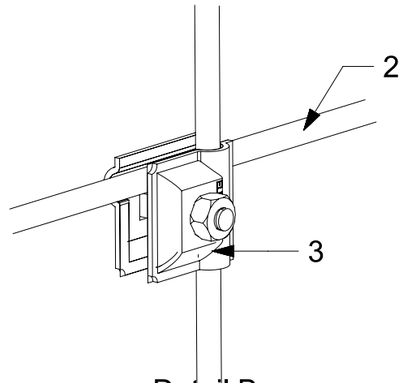

Detail B
Universal connector - clamp (3) with round conductor (2)

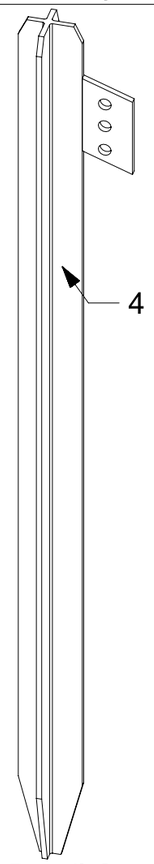

Detail C
Earth rod cross profile (4) 50x1500mm

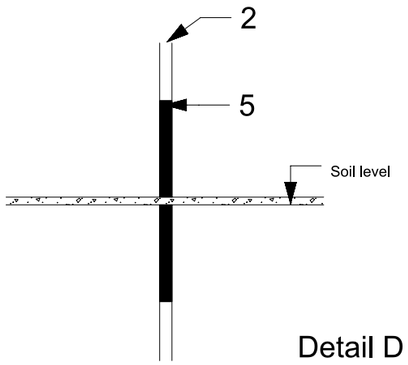

Detail D
Waterproofing anticorrosion tape (5) with round conductor (2)

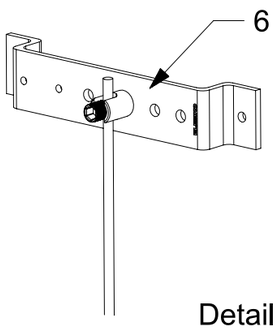

Detail E
Equipotential earthing bar (6)

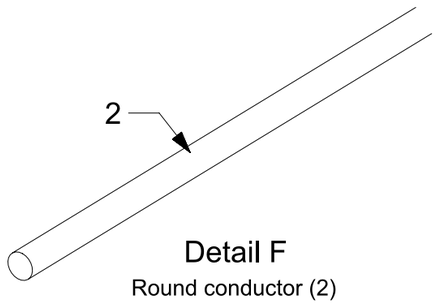

Detail F
Round conductor (2)

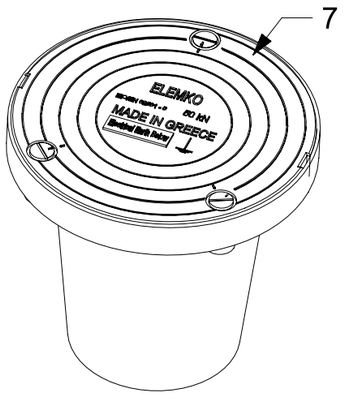

Detail G
Earth pit (7)

ITEM	DESCRIPTION	DETAIL	FOR CONDUCTOR Steel (St/tZn)
1	Clamping plate "H' conductor	A	62 06 108
2	Round conductor	A,B,D,F	64 00 011
3	Universal connector - clamp	B	62 08 014
4	Earth rod cross profile	C	63 00 015
5	Waterproofing anticorrosion tape	D	61 03 303
6	Equipotential earthing bar	E	66 20 003
7	Earth pit	G	60 09 021

ELEMKO

TITLE : Substation earthing system

FIRST ISSUED	October 2018
DRAWN BY	Dionysopoulos G.
CHECKED BY	Kiosse T.
APPROVED BY	Kiosse T.
SCALE	None
ISSUANCE DATE	October 2018

DRG NO. 075

www.elemko.gr elemko@elemko.gr

SHEET 1 OF 1

All dimensions in mm

A3